OpenFIESTA 显微镜1.0

安装 手册

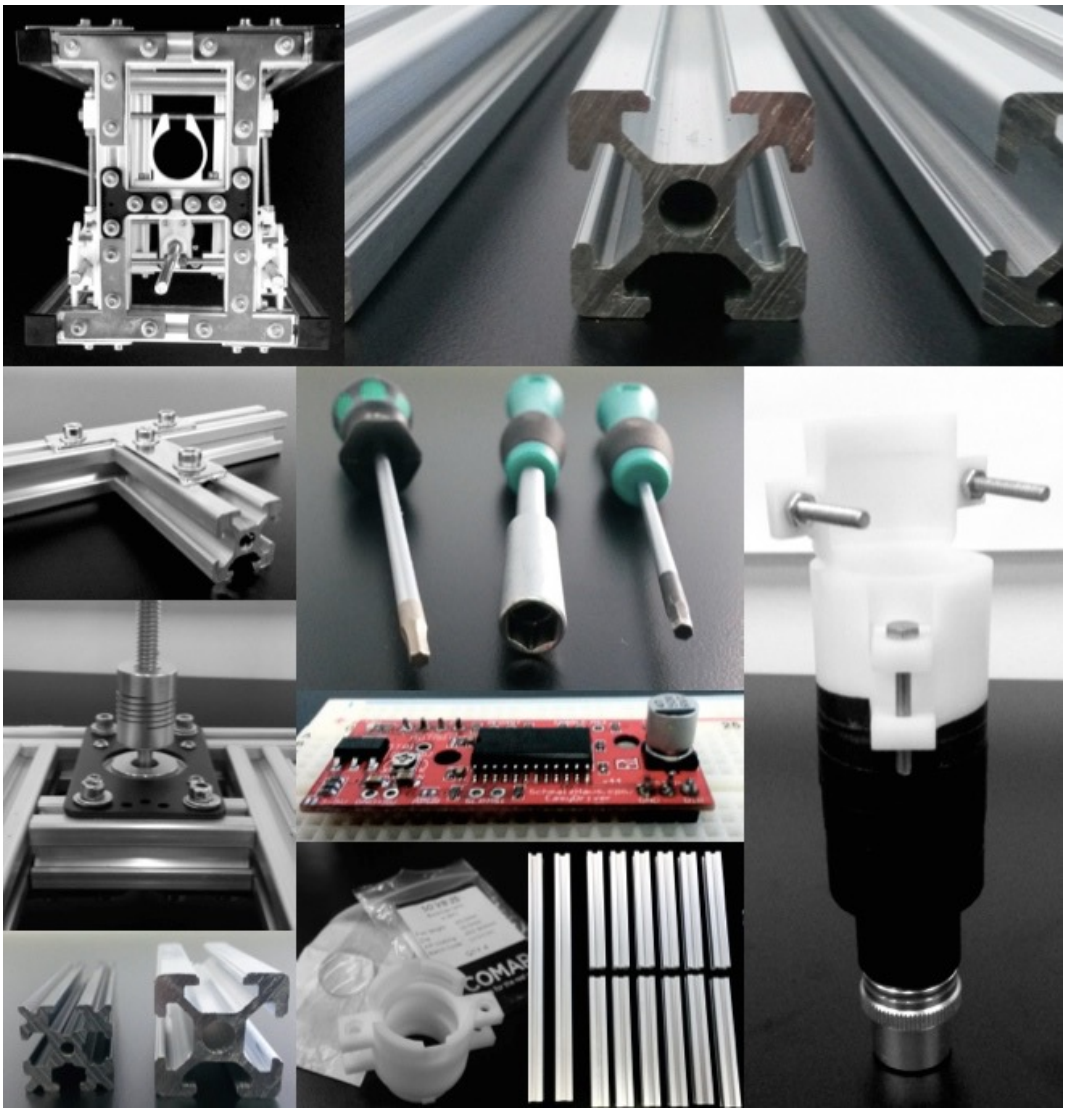

open source hardware

DOCUMENTATION

深圳 中国 2017 年 8 月 30 日

Introduction

This version of the Open Microscope, based on the one made by the OpenLabTools at the University of Cambridge, is tailored at the local supply ecosystem of Shenzhen. Shenzhen, being the world´s major electronics and hardware components manufacturing hub, provided us with an unlimited supply of possible parts to build version 1.0 of the OpenFIESTA microscope.

One particularity of Shenzhen's supply ecosystem is that you can find both the original and Shanzai (look-a-like) version of all goods available. The advantage is that you can find very cheap parts to build a test version. One drawback is that sometimes it is hard to know if you are buying good quality parts. A good rule of thumb; you get what you pay for! Overall Shenzhen's supply and speed make it possible to move fast into the next developmental cycle of your hardware project.

To build the linear stage, we used mainly three providers:

1. Taobao, www.taobao.com: V-slot beams, screws & nuts, rods, and micro-controllers (Raspberry Pi and Arduino)
2. 华强北 (Huaqiangbei) Electronic Market: Electronics components (Jumper wires, Arduino Uno (Shanzai?), Shanzai Raspberry Pi Cam,
3. WeNext, www.wenext.cn, for 3D printing parts. We printed in high quality resin. WeNext delivers an excellent product within one day after placing the order (except when typhoons decide to pass by...)

This installation manual contains the Bill of Materials (BOM) of the OpenFIESTA microscope version 1.0 as well as a step by step installation tutorial. The idea behind Open Source Hardware is that you are provided with all the information of previous efforts in order to build you own (hopefully improved!) version, which in turn you document and share with the community. It is important to keep in mind that this manual only serves to guide you in the building process; you will most probably have to adapt certain parts and its assembly based on new findings in your local supply ecosystem.

For a detailed description about all the elements and production of version 1.0, please read "Hacking a microscope @ OpenFIESTA Step by step guide".

Have fun!

J&J
深圳 中国

2017 年 8 月 30 日

Bill of Materials (BOM)

1. Frame, Linear Translation Stage & Z-axis control

Item	Qty	Referential image
Frame		
V-slot Al extrusion profile 300mm	4	
V-slot Al extrusion profile 150mm	12	
V-slot Al extrusion profile 60mm	2	
V-slot end caps	8	
L-brackets for V-slot	12	
T-brackets for V-slot and OpenBeam	8	
NEMA 17 Stepper Motor Mount	1	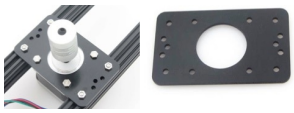
Shaft clamps (8 pieces make 4 sets)	8	
Mechanical components		
Nema 17 Stepper Motor 12V 200 steps/revolution (1.8°) or 400 steps/revolution (0.9°)	1	
Aluminum Flex Shaft Coupler 5mm-8mm	1	
LM8UU linear bearing	2	
Stainless Steel smooth rod ⌀8mm; L 300mm	2	
M8 threaded rod ⌀8mm; L 300mm; pitch 1.25mm	1	
M6 threaded rod ⌀8mm; L 150 mm; pitch 1.0 mm	4	
M6 threaded rod ⌀8mm; L 120 mm; pitch 1.0 mm	1	

Item	Qty	Referential image
Acrylic sheet for stage (100 x 140 x 5 mm)	1	
Fasteners		
Cap and Hex head screws M3x8mm	4	
Hex head screws M3x20mm	4	
Cap head screws M4x6mm	150	
Hex nuts M6	14	
Hex nuts M8	3	
Hammer head drop-in Tee nut M4x6mm	150	
Washers M4	100	
Washers M6, M8	20	
Electronics		
Arduino Uno R3	1	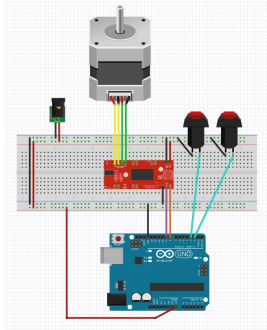
Easy-driver		
Stacking headers, Jumper wires, electrical wire		
Push buttons small	2	
Breadboard		
Tools		
Hex key driver for M3	1	 
Hex nut driver for M3	1	
Hex Allen key for M3 and M4	1	
Soldering iron, soldering wire	1	
Hack saw (to cut threaded rods)	1	

2. Optics

Item	Quantity	Referential image
Plan Achromatic Objective 4X (4/0.1, 160/0.17) DIN/C-mount	1	
Plan Achromatic Objective 10X (10/0.25, 160/0.17) DIN/C-mount	1 if preferred	
Biconvex lens ⌀ 25mm, focal length 50mm	1	
Optical tube parts	1 of each part	see table 3
Hex cap head screws (hex bolts) M2 and nuts	min 2	
Raspberry Pi	1	
Raspberry Pi Camera 8MP and cable	1	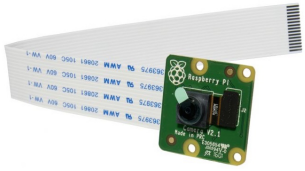

3. Illumination

Item	Quantity
LED 5mm warm white	1
Stacking headers, Jumper wires, electrical wire, resistor 1kΩ	pack of each
small breadboard	1
Potentiometer	1
3D printed LED holder	1

步骤一 **Print 3D printed parts**

The .STL files for all the 3D printed parts can be found both on shenzhen.keymer.cl and in the OpenLabTools repository.

Below a graphical overview of all the 3D printed parts needed to build the microscope. Parts for construction of the frame can be found in table 1 and 2, while table 3 shows all the parts needed for the optical system. Left and Right are defined by looking at the stage from the back. Notice the number of pieces needed of a certain part is indicated; in case no number is mentioned, you only need to print one.

Table 1. Renderings of 3D printed parts for the frame and stage as designed by OpenLabTools[1]

	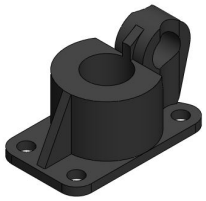		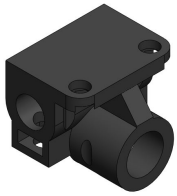
Optics Clamp	Lead Nut Mount Top	Lead Nut Mount Bottom	2x Front Stage Mounts
		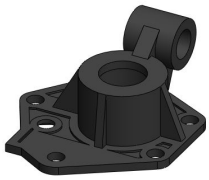	
Bearing Mount Left Bottom	Bearing Mount Left Top	Bearing Mount Right Top	Bearing Mount Right Bottom

Table 2. Renderings of 3D printed parts for T-brackets[2] and Shaft Clamps[3] as designed by OpenBeam[4] and the LED holder as designed by Fernán Federici

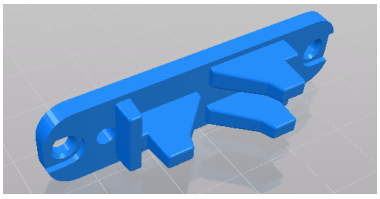	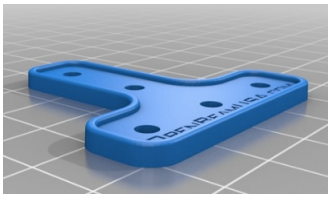	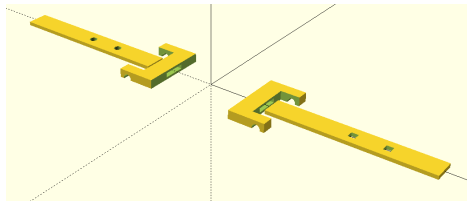
8x Shaft Clamp	6x T Bracket	LED holder

[1] https://github.com/OpenLabTools/Microscope

[2] https://www.thingiverse.com/thing:30524

[3] https://www.thingiverse.com/thing:30528

[4] http://www.openbeamusa.com/

Table 3. Renderings of parts for a 3D printed optical tube as designed by OpenLab Tools

	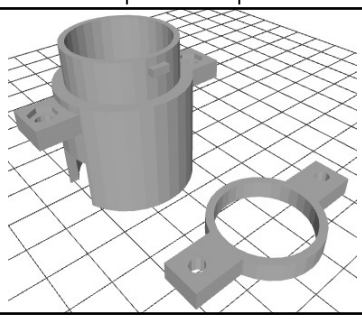	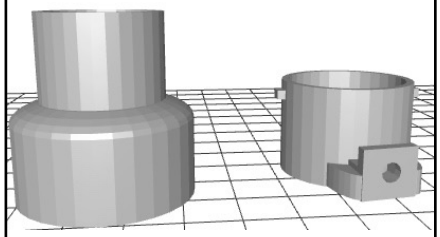
PiCam Mount	Lens Mount	Adjustable Length Tube
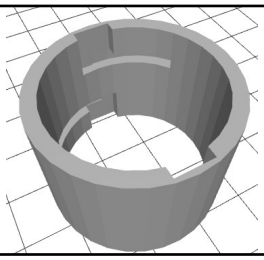	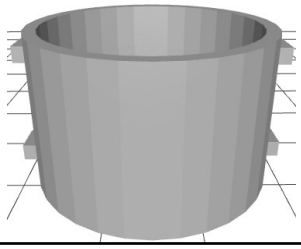	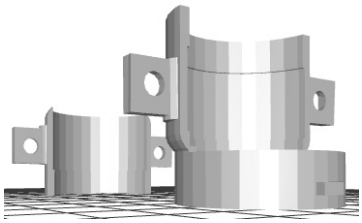
Female-female Connector	Male-male connector	Objective Lens DIN/C-mount Adapter

In case you prefer a higher quality optical tube you can buy similar parts with a optics provider. For a detailed description of these parts and referential prices, see paragraph 3.3 in the *Hacking a microscope @ OpenFIESTA Step by step guide*.

步骤二 **Frame base Top and Bottom**

The frame consists of two square bases, that make the top and bottom. They are identical in structure, but differ in that the bottom base holds the stepper motor and the top the optical tube.

For the top base you need:	
4	V-slot 150 mm beams
1	V-slot 60 mm beam
4	V-slot compatible T-brackets
2	Small OpenBeam T-brackets*
1	Optics clamp
1	Shaft clamp (2 pieces form 1 clamp)
24	M4x6mm screws
24	M4 Washers
24	Drop-in Tee nut M4x6mm

For the bottom base you need:	
4	V-slot 150 mm beams
1	V-slot 60 mm beam
2	V-slot compatible T-brackets
4	Small OpenBeam T-brackets*
1	Nema17 stepper motor Mount
1	Shaft clamp (2 pieces form 1 clamp)
24	M4x6mm screws
24	M4 Washers
24	Drop-in Tee nut M4x6mm

* Original design comes with M3 holes, these can be easily widened with scissors (this works for both the metal ones as well as for the 3D printed ones). For the bottom base we recommend using metal T-brackets to ensure support of the stepper motor.

Start by making a ˙T˙ configuration with a 150mm beam and the 60mm beam and join them with a small T-bracket.

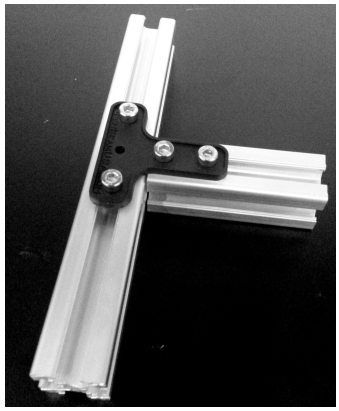

If using drop-in Tee nuts it is not needed to slide the T-bracket into the aluminum beam, so you can just drop in the nuts, align them with the bracket and then connect the other beam to form the T.

>>Always tighten everything once you have everything in place. For now leave the bolts in the 150mm beam loose to adjust the configuration later<<

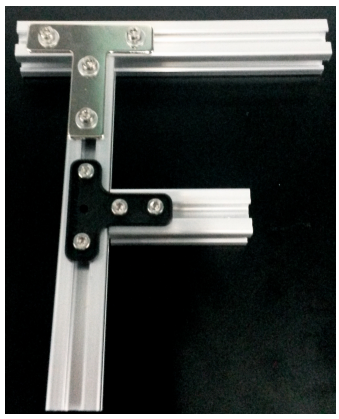

Attach another 150mm beam perpendicular to the 150mm beam of your ˙T˙. Leave a 30mm space from the end of the second 150mm beam and join it to the other using a T-bracket, as shown. For the top base, you can use a V-slot compatible bracket (as shown in the picture on the right), for the bottom you need to use another small bracket, so the mount will fit.

Continue by adding another 150mm beam on the other side of the 60mm beam joining the perpendicular beam you just attached. This way you create a square space within the beams, where you hold the stepper motor (bottom base).
For the top base, you attach the optical tube clamp to the outside of the 60x60mm square, but inside the rectangular space of the assembly.

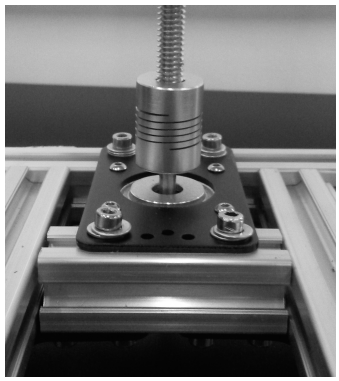

For the bottom base, flip the assembly over and attach the stepper motor mount so the motor fits in the center of the 60x60mm square (see picture on the right).

Now attach the fourth 150mm beam to close off the open ends of the 150mm beams.

Both frames need a shaft clamp attached on the outside of the 60x60mm. These serve to hold the smooth rods, which in turn are needed to change rotational movement into linear translation. The shaft clamp consists of two identical pieces, of which one is attached to the 150mm beam with M4 screws and drop-in nuts, and the other is screwed onto it´s twin part with M3x25mm hex head screws. Since the clamps are designed for OpenBeams, we have to again widen the outermost holes to fit M4 slot that fit the V-slot nuts. The inner holes can stay M3 since we only use them to join the two parts that make the clamp. Start with the part that will be attached to the beam. In the two inner holes,

insert the M3x25mm screws, with the hex cap on the side that will be attached onto the beam (in the picture above it is done the opposite way). Then screw the part onto the beam using the outermost holes and M3 screws and drop-in nuts.

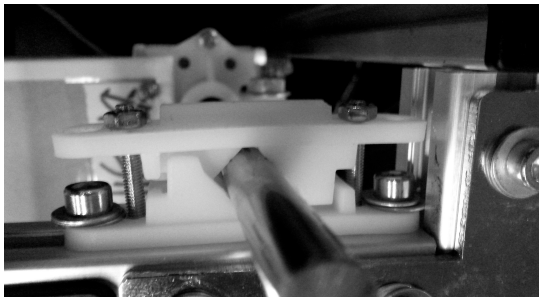

Make sure the half-clamp is just touching the corner where the two 150mm beams connect. For the bottom base, place the other part of the clamp onto the M3x25mm screws and secure with a M3 washer and nut, but leave loose to be able to fit the rod.
For the top base, leave the other half of the shaft clamp off for now, as you will have to fit the smooth rods and bearings first (step 5).

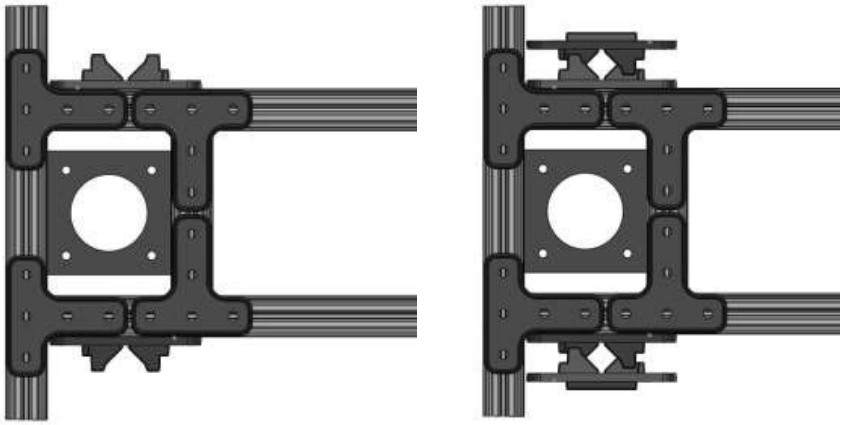

Figure 1. Assembly of Shaft Clamps. Adopted from OpenLabTools

At this moment, the two bases should look like the pictures below. Top shown on the left and on the right a view of the bottom base.

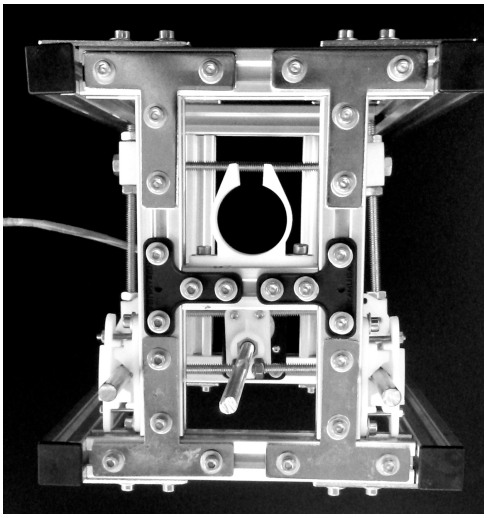

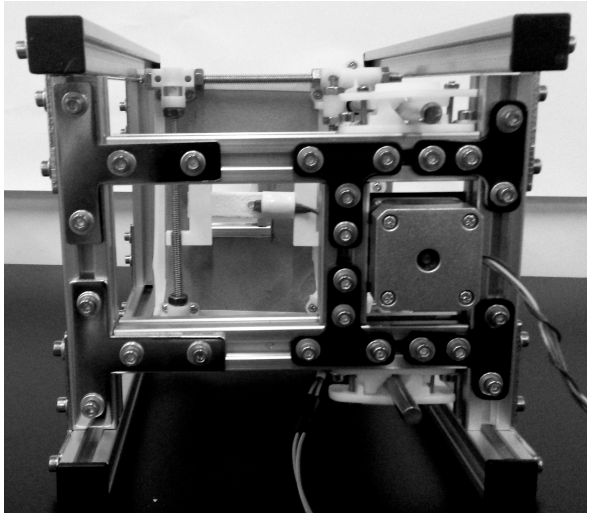

步骤三 **Frame assembly**

Click the V-slot end caps into the 300mm V-slot beams (see black squares in the two pictures above). Even though they are only needed on the bottom of the frame, we decided for aesthetic reasons to also place them on top.

Now proceed by attaching the 300mm beams to the bottom frame base structure with T-brackets. The feet should protrude about 30mm below the frame base to allow the stepper motor to be connected underneath.

Once you have the frame standing, attach the top base using L-brackets. Here you can decide to align the base with the end of the 300mm beams, or to leave some space just as you did with the bottom base.
The frame will need to be finished with four more 150mm beams to create a stable, square-shaped frame. We will however do this later on, since it is easier to assemble the stage first.

步骤四 **Stepper motor, shaft coupler and lead screw**

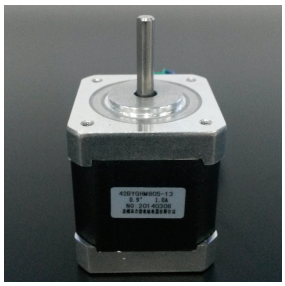

The NEMA17 stepper motor, together with a flexible shaft coupler and a threaded rod (lead screw), make up the mechanical drive system of the microscope.

Start by aligning the four holes of the stepper motor with the holes of the mount and screw the motor onto the underside of the mount, using M3x6mm screws.

Insert the M8 threaded rod into the 8mm bore hole of the flex-shaft coupler and tighten the grub screws using a small 2mm allen key. Now align the rod with the vertical axis of the frame and slide the 5mm bore end of the coupler onto the shaft of the stepper motor. Also tighten this side with the small allen key.

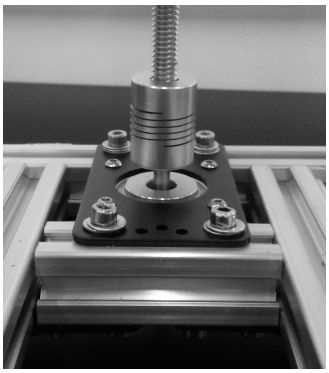

Note that the threaded rod is not constrained at the top and will have a lot of freedom to move relative to the motor shaft. This is intentional; the lead screw will be kept vertical by the lead nut (described in more detail later on). Adding a constraint on the horizontal movement at the top would over-constrain the system and introduce unnecessary forces in the screw.

步骤五 **Lead nut, rods and linear bearings**

A leadscrew is a stationary screw (threaded rod) on a rotating shaft (the one of the stepper motor in this case). A nut placed on the screw is moved up and down by the rotational movement of the of the screw. The nut is constrained by 3D printed mounts, and by connecting this nut mount to the bearing mounts on the two smooth rods (which prevent the lead nut from rotating relative to the stage) that are aligned with the leadscrew, a stage can be moved up and down.

Start by sliding the bottom part of the 3D printed Lead Nut Mount onto the M8 threaded rod, followed by screwing the M8 nut onto the rod and placing the other part of the Lead Nut Mount on top and secure with M3 bolts and nuts. Estimate the distance from the top of the frame, since the stage will be finally located under the optical tube.

Now place the smooth rods into the bottom shaft clamps and tighten.

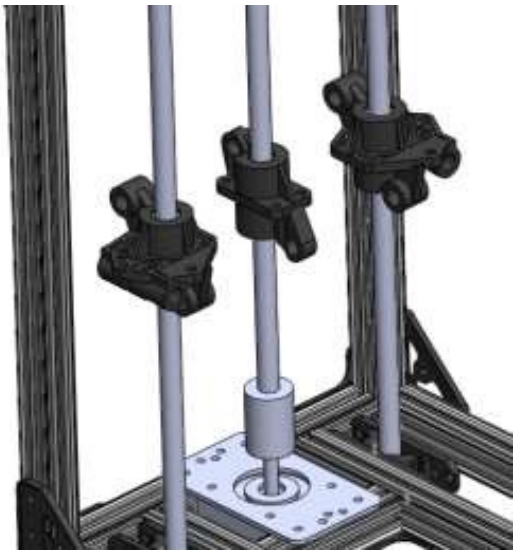

Figure 2. Lead nut mount and Bearing mount positioning. Source: OpenLabTools

Assemble the bearing mounts by pressing the LM8UU linear bearings into the top and bottom of the mounts and secure with M3 screws and nuts. Slide these bearings fitted into their mounts onto the smooth rods. Be very careful in this step to prevent the ball bearings popping out of the LM8UU bearings.
The bearing mounts are orientated so that the tubes for the M6 rods are on the outside.

Finish this step by clamping the top shaft clamps with nuts and washers. Make sure the shafts are perfectly parallel and vertical.

步骤六 **Stage**

The stage will be held by the bearing mounts and lead nut mount on the back of the frame. Connect the lead nut mount and bearing mounts by passing two 150mm M6 threaded rods through the upper and lower holes in the mounts. Secure with M6 washers and nuts. Keep in mind you will have to screw on the inner nuts before passing the rod through the next hole.

Continue by inserting M6x150mm threaded rods into the tubes in the bottom of the bearing mounts, secure with M6 nuts and washers and make sure they are parallel.

Finish the stage frame by placing the front stage mounts and the M6x150mm threaded rod that connects them. Insert a M6 nut into the hex holes on each mount.

Thread the rod through the first mount until the end of the rod is at about the end of the mount, then add two nuts with washers to the other end of the rod.

Thread the other mount onto the rod and adjust both mounts until they line up with the threaded rods attached to the stage. Place nuts and washers onto the protruding rods and connect the front stage mounts.

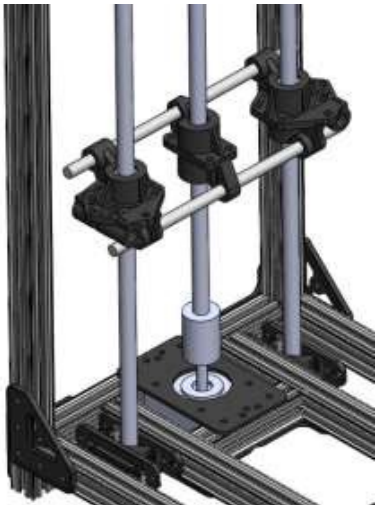

Figure from OpenLabTools

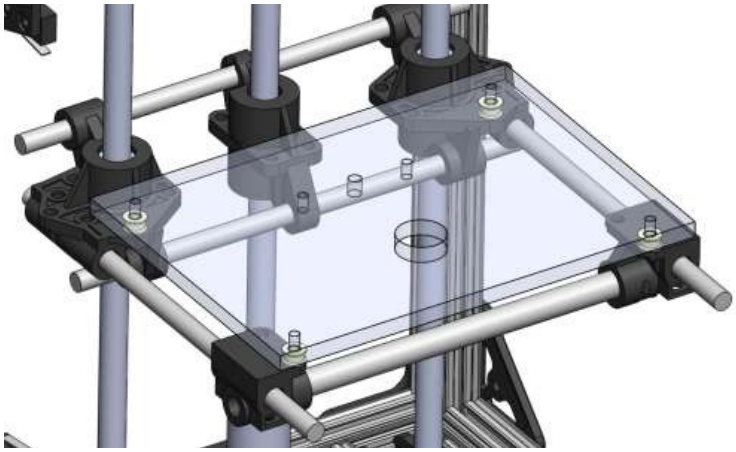

Figure from OpenLabTools

Place the acrylic sheet (or a piece of cardboard for a first attempt) on top of the mounts and align with corresponding holes. Secure the stage in place with M3x20mm screws, washers and nuts. Make sure the stage is level.

The only thing left to finish the frame is to add the four 150mm V-slot beams to the sides in order to make stable square bases.

Now your frame is ready, we can move to the assembly of the optics of the microscope.

步骤七 **Optics**

The optical system is described in detail in chapter 3 in the *Hacking a microscope @ OpenFIESTA Step by step guide*. Here we will discuss only the assembly of the 3D printed optical tube and placing of the objective and lens. For the high quality optical tube, please see paragraph 3.3 in the above mentioned document.

A note on the 3D printed optical tube:
For version 1.0 of the OpenFIESTA microscope, we printed all parts in epoxy resin using ***WeNext*** *3D printing service in Shenzhen. In previous versions we have used both the costly and high quality tubing components from* ***Edmund Optics*** *and thermoplastic 3D printed components to assemble the tubing. With the latter we had some problems because light was let through, both because of material characteristics and poor assembly of the parts. With the resin 3D printed*

parts, we noticed that assembly was not easy because the material was very smooth and the parts were probably designed for the more rough result you get when printing with thermoplastics. We used a lot of tape to make parts fit and hold them in place. We suggest people interested in a very low cost optical tube to work on a new design.

Start assembly of the optical tube by screwing the **objective** into the **DIN/C-mount adapter**. In case of resin 3D printed parts, this is not so easy as the material is smooth and hard. You will have to multiple times screw in the objective by force to make a thread in the resin adapter. Make sure the lens point straight down.

Attach the joint adapter+objective to the **female connector**. This part is tricky to fit. Make sure it is tightened well and then seal with tape.

Place the biconvex lens in the **lens mount**. It will be loose but held in place by the ring.

>>Do not touch the lens with your hands, use a piece of paper towel to make sure no fingerprints or scratches get on the lens<<

Now you can connect the female connector of the lens mount to the objective-adapter-female connector assembly.

Add the male connector and then the adjustable length tube (we are not sure if we used this one in the end).

It takes a bit to discover how to assemble the tube. Just try it once without adding the lens, and once you have a clear picture of all the parts and the way they fit together, assemble them in their final configuration en fix them in position.

Keep in mind that de lens has a focal length of 50mm, so make sure the lens is at a 50mm distance from the camera.

Then finish the optical system by placing the Pi Cam in its mount and place this onto the tube. Seal the whole tube with tape (preferably black).

步骤八 **Illumination**

Elongate the legs (anode and cathode) of a simple 5mm warm white LED to the female side of female-male jumper wires and make sure your wiring is long enough to go from the stage to the breadboard, near your Arduino. Label the wires (+) and (-).

Connect the 5V and GND pin of the Arduino to a small breadboard. Connect in turn the 5V to the (+) side and the GND to the (-) side of the potentiometer.

Connect the third leg of the potentiometer (signal) to the long leg (+) of the LED.
The (-) of the LED will be connected to the GND pin, with a 1kΩ resistor in between.

The LED is placed centered to the objective in a 3D printed holder designed by our friend Fernán Federici that fits onto the M6 threaded rods of the stage.

步骤九 **Motor control of z-axis movement of the stage**

The z-axis movement of the stage is controlled by the stepper motor. This stepper motor is in turn controlled by an EasyDriver micro controller, which is connected to the Arduino. The stage can be moved up and down by the use of push buttons. The details of the electronics set-up is discussed in chapter 5 of the *Hacking a microscope @ OpenFIESTA Step by step guide*. Below you can see how the driver and the pushbuttons are placed on a breadboard which connects to the Arduino.

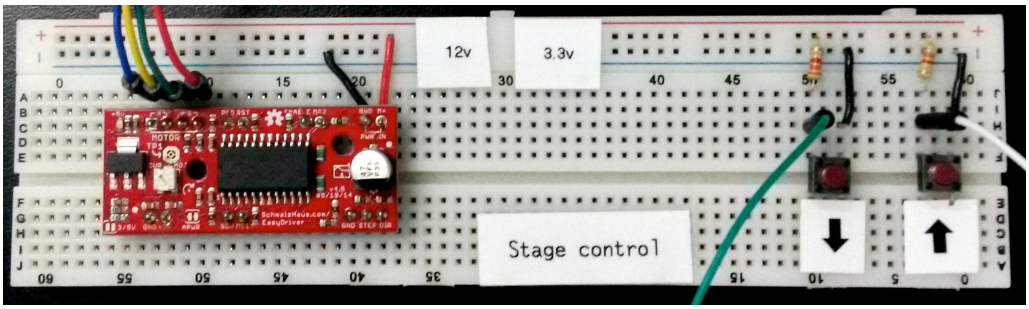

If everything worked out fine, by now you should have a working microscope! In chapter 6 of the *Hacking a microscope @ OpenFIESTA Step by step guide* you can find a detailed description on image capturing and time lapse microscopy using the Raspberry Pi.

Acknowledgements

We thank our dear friend and colleague Luping Xu (徐芦平) for generously hosting us at OpenFIESTA, Ji Li (李季) for his endless efforts and joyful spirit, and to the great talented students who's enthusiasm and hard work had made this adventure an intellectual pleasure. We are especially thankful to Tobey (黄簏芳), Aileen (廖玲), 吴越, 刘晨光, 毛运浩, 段桂春 and Alfredo L'Homme who took on the challenge of a trans pacific collaboration in Open Source Hardware.

We thank the following organizations for financing this adventure:

OpenFIESTA for hosting us during an amazing two weeks of learning and growing together at Tsinghua University (清华大学) Shenzhen (深 圳) Graduate School (研究生院).

FONDECYT 1150430 from Conicyt Chile supporting the Keymer laboratory's research and making our visit to Shenzhen possible.